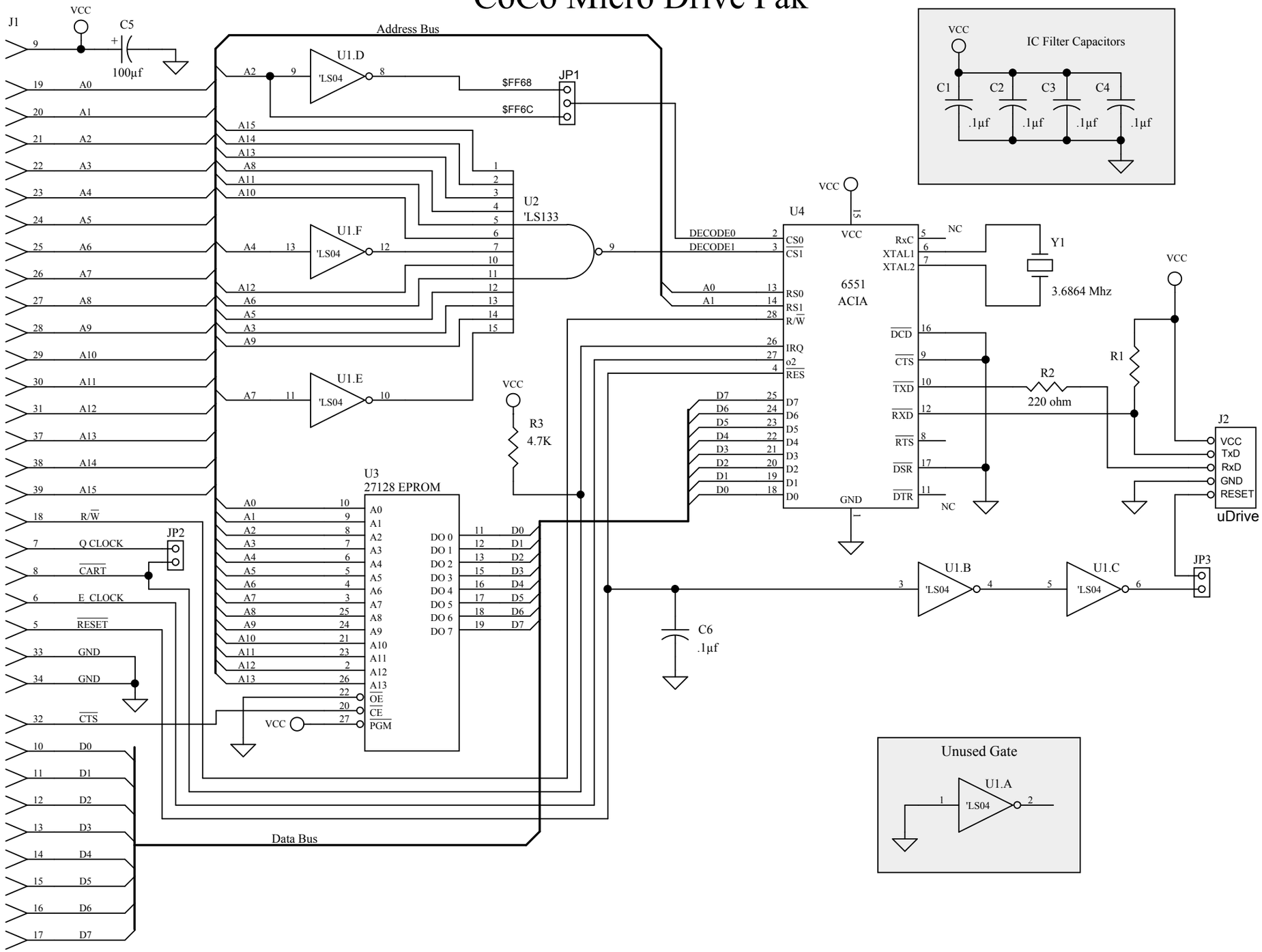CoCo Micro Drive Pak